TrynEx International, LLC, 531 Ajax Drive, Madison Heights, MI 48071-2429 • www.snowexproducts.com

June 15, 2026
Lit. No. 31340, Rev. 08

SnowEx®

POWER PUSHER™ TE

31608/-1/-2, 31612/-1/-2/-3, 31610/-1/-2, 31614/-1/-2/-3, 32190/-1/-2/-3, 32192/-1/-2/-3, 32194/-1/-2/-3, 32196/-1/-2/-3, 32821/-1/-2/-3, 32824/-1/-2/-3, 32826/-1/-2/-3

POWER PUSHER™ Snowplow

TRACE™ Trip Edge Pusher Plow

Parts List

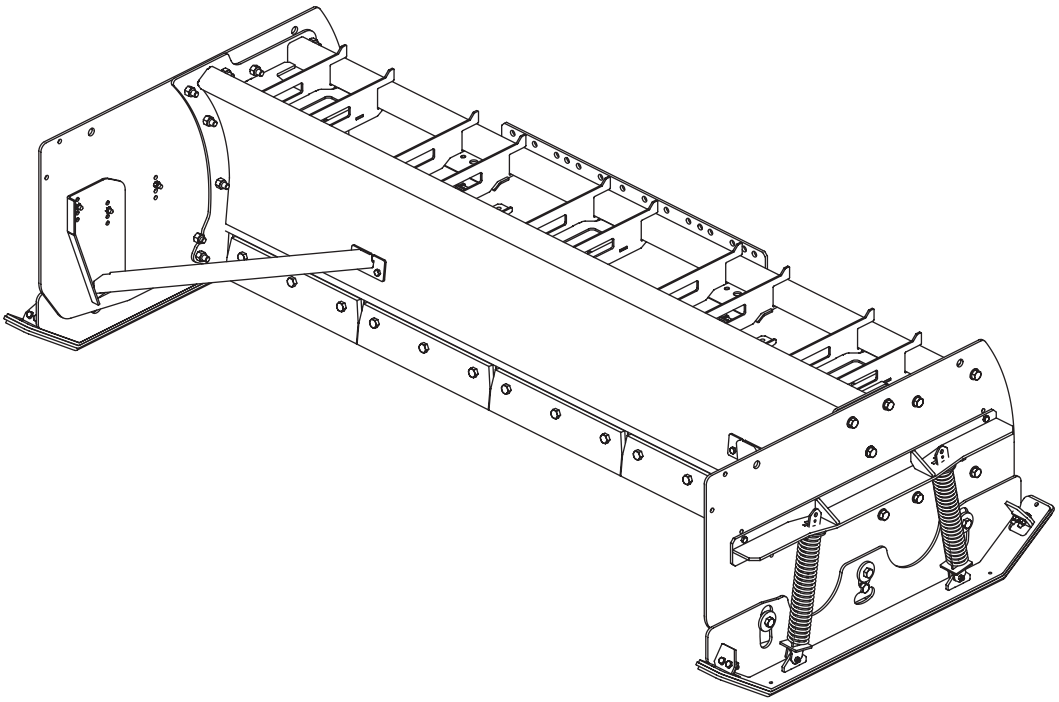

A DIVISION OF DOUGLAS DYNAMICS, LLC

Blade Components

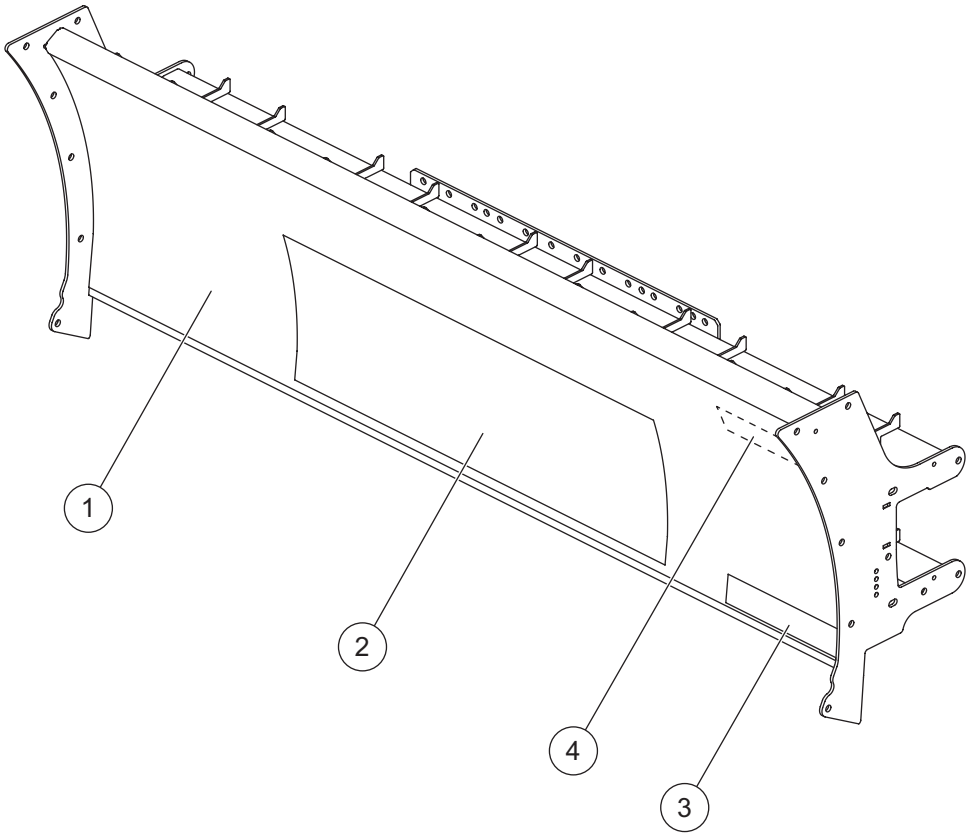

POWER PUSHER™ BLADE COMPONENTS

Blades					
Length	**Height**	**Pusher Plow Model**	**Blade Kit**	**LH 2' Extension Kit**	**RH 2' Extension Kit**
8'	30"	31612 / 31612-1/ 31612-2 / 31612-3	81463		
8'	36"	31608 / 31608-1 / 31608-2	81469		
10'	30"	31614 / 31614-1 / 31614-2 / 31614-3	81464		
10'	36"	31610 / 31610-1 / 31610-2	81471		
10'	42"	32190 / 32190-1 / 32190-2 / 32190-3	87219		
12'	30"	32821 / 32821-1 / 32821-2 / 32821-3	87985		
12'	42"	32192 / 32192-1 / 32192-2 / 32192-3	87220		
14'	30"	32824 / 32824-1 / 32824-2 / 32824-3	81464	81499	81500
14'	42"	32194 / 32194-1 / 32194-2 / 32194-3	87219	87179	87180
16'	30"	32826 / 32826-1 / 32826-2 / 32826-3	87985	81499	81500
16'	42"	32196 / 32196-1 / 32196-2 / 32196-3	87220	87179	87180
		LH = Left Hand		RH = Right Hand	

Blade Components							
Item	**Part**	**Qty**	**Description**	**Item**	**Part**	**Qty**	**Description**
81463 8' 30" Blade Kit							
1	81768	1	8' 30" Blade	3	31220	1	Label – Logo, TRACE™ White, Small
2	31217	1	Label – Logo, POWER PUSHER SM	4	31225	1	Label – Logo, TRACE White, Text
81469 8' 36" Blade Kit							
1	81769	1	8' 36" Blade	3	31220	1	Label – Logo, TRACE White, Small
2	31218	1	Label – Logo, POWER PUSHER MD	4	31225	1	Label – Logo, TRACE White, Text
81464 10' 30" Blade Kit							
1	81771	1	10' 30" Blade	3	31220	1	Label – Logo, TRACE White, Small
2	31217	1	Label – Logo, POWER PUSHER SM	4	31225	1	Label – Logo, TRACE White, Text
81471 10' 36" Blade Kit							
1	81778	1	10' 36" Blade	3	31220	1	Label – Logo, TRACE White, Small
2	31218	1	Label – Logo, POWER PUSHER MD	4	31225	1	Label – Logo, TRACE White, Text
87219 10' 42" Blade Kit							
1	89121	1	10' 42" Blade	3	31220	1	Label – Logo, TRACE White, Small
2	31218	1	Label – Logo, POWER PUSHER MD	4	31225	1	Label – Logo, TRACE White, Text
87985 12' 30" Blade Kit							
1	81749	1	12' 30" Blade	3	31220	1	Label – Logo, TRACE White, Small
2	31217	1	Label – Logo, POWER PUSHER SM	4	31225	1	Label – Logo, TRACE White, Text
87220 12' 42" Blade Kit							
1	89122	1	12' 42" Blade	3	31220	1	Label – Logo, TRACE White, Small
2	31218	1	Label – Logo, POWER PUSHER MD	4	31225	1	Label – Logo, TRACE White, Text
Blade Accessories							
ns*	85733	1	8' Back Drag Edge Kit	ns*	85735	1	12' Back Drag Edge Kit
ns*	85734	1	10' Back Drag Edge Kit				
G = Grade			ns = not shown	MD = Medium			SM = Small

* Accessory only.

Blade Components

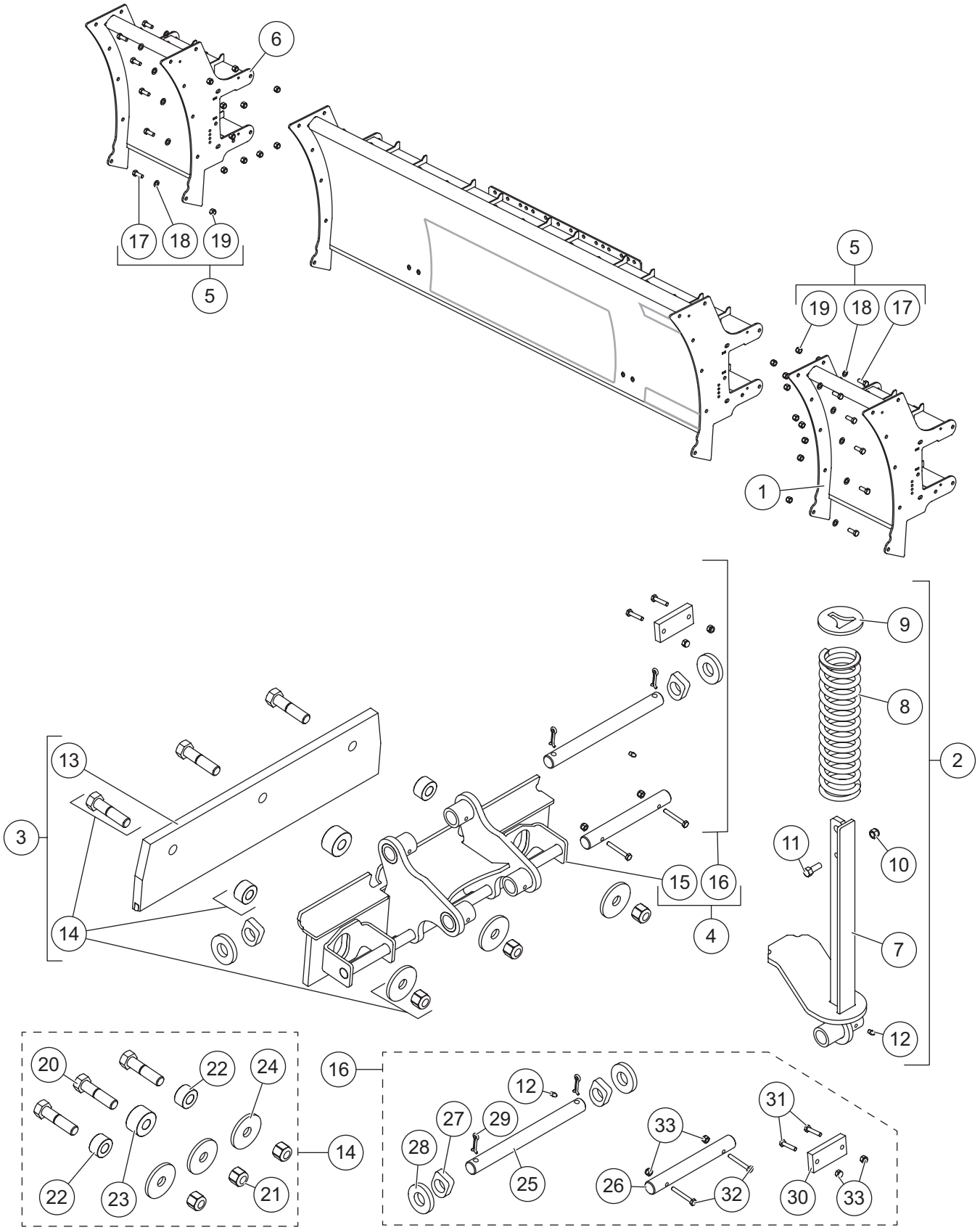

POWER PUSHER™ BLADE COMPONENTS

Blades and Extensions					
Length	**Height**	**Pusher Plow Model**	**Blade Kit**	**LH 2' Extension Kit**	**RH 2' Extension Kit**
14'	30"	32644 / 32644-1 / 32644-2 / 32644-3	81464	81499	81500
14'	42"	32134 / 32134-1 / 32134-2 / 32134-3	87219	87179	87180
16'	30"	32646 / 32646-1 / 32646-2 / 32646-3	87985	81499	81500
16'	42"	32136 / 32136-1 / 32136-2 / 32136-3	87220	87179	87180
		LH = Left Hand		RH = Right Hand	

Extension Components							
Item	**Part**	**Qty**	**Description**	**Item**	**Part**	**Qty**	**Description**
	81499	1	2' Left-Hand Extension Kit, 30"		87179	1	2' Left-Hand Extension Kit, 42"
	81500	1	2' Right-Hand Extension Kit, 30"		87180	1	2' Right-Hand Extension Kit, 42"
81499 Left-Hand 2' Extension Kit, 30"							
1		1	2' Left-Hand Extension	4	81459	1	Trip Edge Kit
2	79986	1	Spring Bar Kit	5	79937	1	Bolt Bag – 2' Extension
3	79966	1	Cutting Edge Kit				
81500 Right-Hand 2' Extension Kit, 30"							
2	79986	1	Spring Bar Kit	5	79937	1	Bolt Bag – 2' Extension
3	79966	1	Cutting Edge Kit	6		1	2' Right-Hand Extension
4	81459	1	Trip Edge Kit				
87179 Left-Hand 2' Extension Kit, 42"							
1		1	2' Left-Hand Extension	4	81459	1	Trip Edge Kit
2	79986	1	Spring Bar Kit	5	79937	1	Bolt Bag – 2' Extension
3	79966	1	Cutting Edge Kit				
87180 Right-Hand 2' Extension Kit, 42"							
2	79986	1	Spring Bar Kit	5	79937	1	Bolt Bag – 2' Extension
3	79966	1	Cutting Edge Kit	6		1	2' Right-Hand Extension
4	81459	1	Trip Edge Kit				
Item 2			**79986 Spring Bar Kit**				
7	89993	1	Spring Bar	10		1	3/8-16 Hex Locknut GB
8	89559	1	Trip Spring – 172 lb/in	11		1	3/8-16 x 1 Hex Cap Screw G5
9	89992	1	Spring Plate	12		1	Grease Fitting
Item 3			**79966 Cutting Edge Kit**				
13	87999	1	Cutting Edge with Inserts	14	79967	1	Bolt Bag – Cutting Edge
Item 4			**81459 Trip Edge Kit**				
15	89892	1	Base Angle	16	79965	1	Bolt Bag – Trip Edge
Item 5			**79937 Bolt Bag – 2' Extension**				
17		11	3/4-10 x 2 Hex Cap Screw G5	19		11	3/4-10 Hex Locknut GB
18		11	3/4 Flat Washer, Type A Narrow				
Item 14			**79967 Bolt Bag – Cutting Edge**				
20		3	3/4-10 x 3 Hex Cap Screw G5	23	86998	1	Bushing, Edge – Large
21		3	3/4-10 Hex Locknut GB, All Metal	24	86999	3	Stopper Plate
22	86997	2	Bushing, Edge – Small				
Item 16			**79965 Bolt Bag – Trip Edge**				
12		1	Grease Fitting	29		2	1/4 x 1-1/2 Cotter Pin
25	86989	1	1 x 11-1/8 Rod, Lower	30	89900	1	Spring Cartridge Guide
26	89986	1	Pivot Pin, Lower	31		2	1/4-20 x 1-1/4 Hex Cap Screw G5
27	89985	2	Bearing Block	32		2	1/4-20 x 2 Hex Cap Screw G8
28	86991	2	Flat Washer Special	33		4	1/4-20 Hex Locknut GB
			G = Grade				

Side Plate Brace Components

8' / 10' / 12' Blades

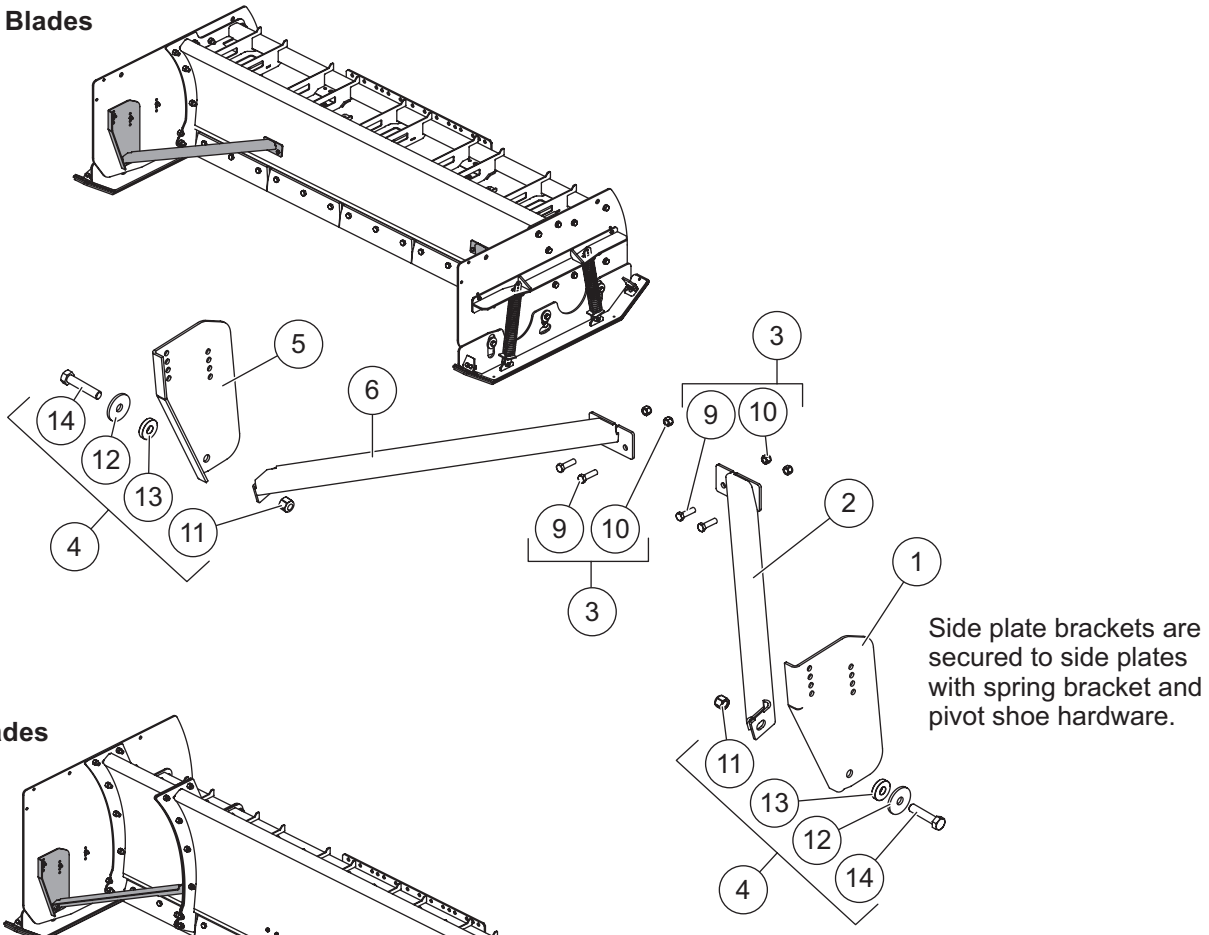

Side plate brackets are secured to side plates with spring bracket and pivot shoe hardware.

14' / 16' Blades

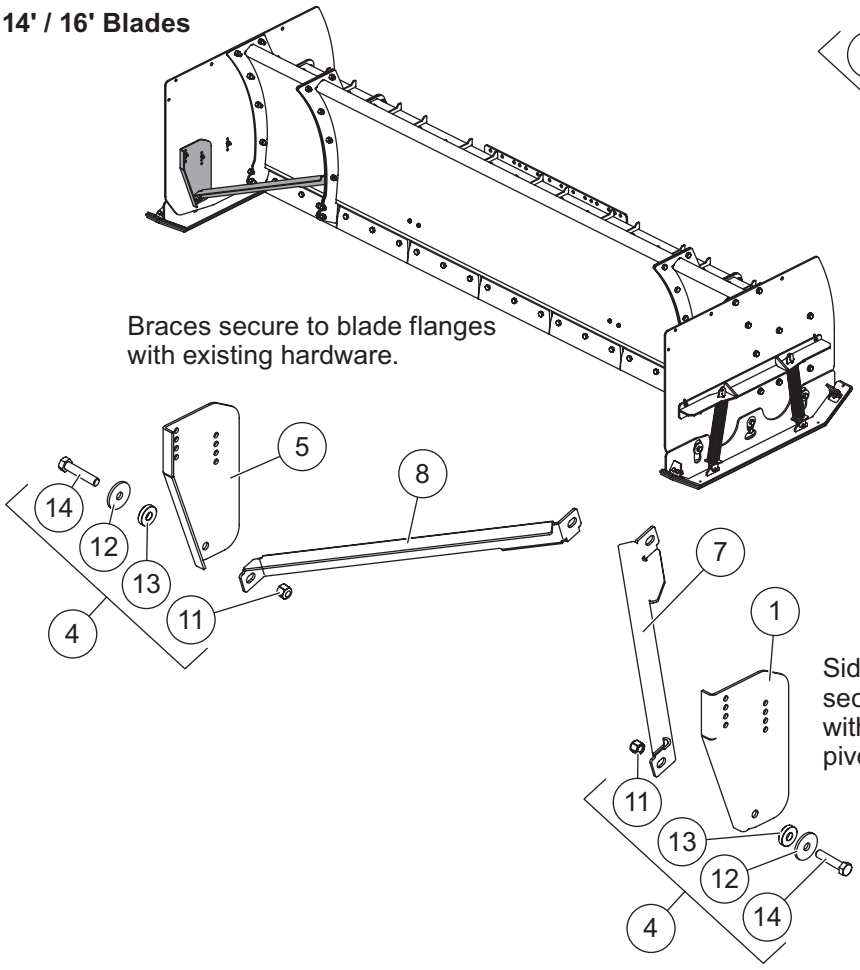

Braces secure to blade flanges with existing hardware.

Side plate brackets are secured to side plates with spring bracket and pivot shoe hardware.

Side Plate Brace Components				
Length	**Height**	**Pusher Plow Model**	**LH Brace Kit**	**RH Brace Kit**
8'	30"	31612 / 31612-1 / 31612-2 / 31612-3	87022	87021
8'	36"	31608 / 31608-1 / 31608-2	87022	87021
10'	30"	31614 / 31614-1 / 31614-2 / 31614-3	87022	87021
10'	36"	31610 / 31610-1 / 31610-2	87022	87021
10'	42"	32190 / 32190-1 / 32190-2 / 32190-3	87022	87021
12'	30"	32821 / 32821-1 / 32821-2 / 32821-3	87022	87021
12'	42"	32192 / 32192-1 / 32192-2 / 32192-3	87022	87021
14'	30"	32824 / 32824-1 / 32824-2 / 32824-3	87027	87026
14'	42"	32194 / 32194-1 / 32194-2 / 32194-3	87027	87026
16'	30"	32826 / 32826-1 / 32826-2 / 32826-3	87027	87026
16'	42"	32196 / 32196-1 / 32196-2 / 32196-3	87027	87026
LH = Left Hand			RH = Right Hand	

Side Plate Brace Components							
Item	**Part**	**Qty**	**Description**	**Item**	**Part**	**Qty**	**Description**
87022 8' / 10' / 12' Left-Hand Brace Kit							
1	89914	1	Side Plate Bracket, Left Hand	3	87025	1	Bolt Bag – Brace Kit
2	85977	1	Support Brace, Left Hand	4	87383	1	Bolt Bag – Pivot Shoe Kit, Front
87021 8' / 10' / 12' Right-Hand Brace Kit							
3	87025	1	Bolt Bag – Brace Kit	5	89913	1	Side Plate Bracket, Right Hand
4	87383	1	Bolt Bag – Pivot Shoe Kit, Front	6	85978	1	Support Brace, Right Hand
87027 14' / 16' Left-Hand Brace Kit							
1	89914	1	Side Plate Bracket, Left Hand	7	85974	1	Support Brace, Left Hand
4	87383	1	Bolt Bag – Pivot Shoe Kit, Front				
87026 14' / 16' Right-Hand Brace Kit							
4	87383	1	Bolt Bag – Pivot Shoe Kit, Front	8	85976	1	Support Brace, Right Hand
5	89913	1	Side Plate Bracket, Right Hand				
Item 3			**87025 Bolt Bag – Brace Kit**				
9		2	1/2-13 x 1-3/4 Hex Cap Screw G5	10		2	1/2-13 Hex Locknut GB
Item 4			**87383 Bolt Bag – Pivot Shoe Kit, Front**				
11		1	3/4-10 Hex Locknut GB	13	89446	1	Bushing, Spacer 2 x 0.78125 x 0.44
12	86999	1	Stopper Plate	14		1	3/4-10 x 3 Hex Cap Screw G5
G = Grade							

Side Plate Components

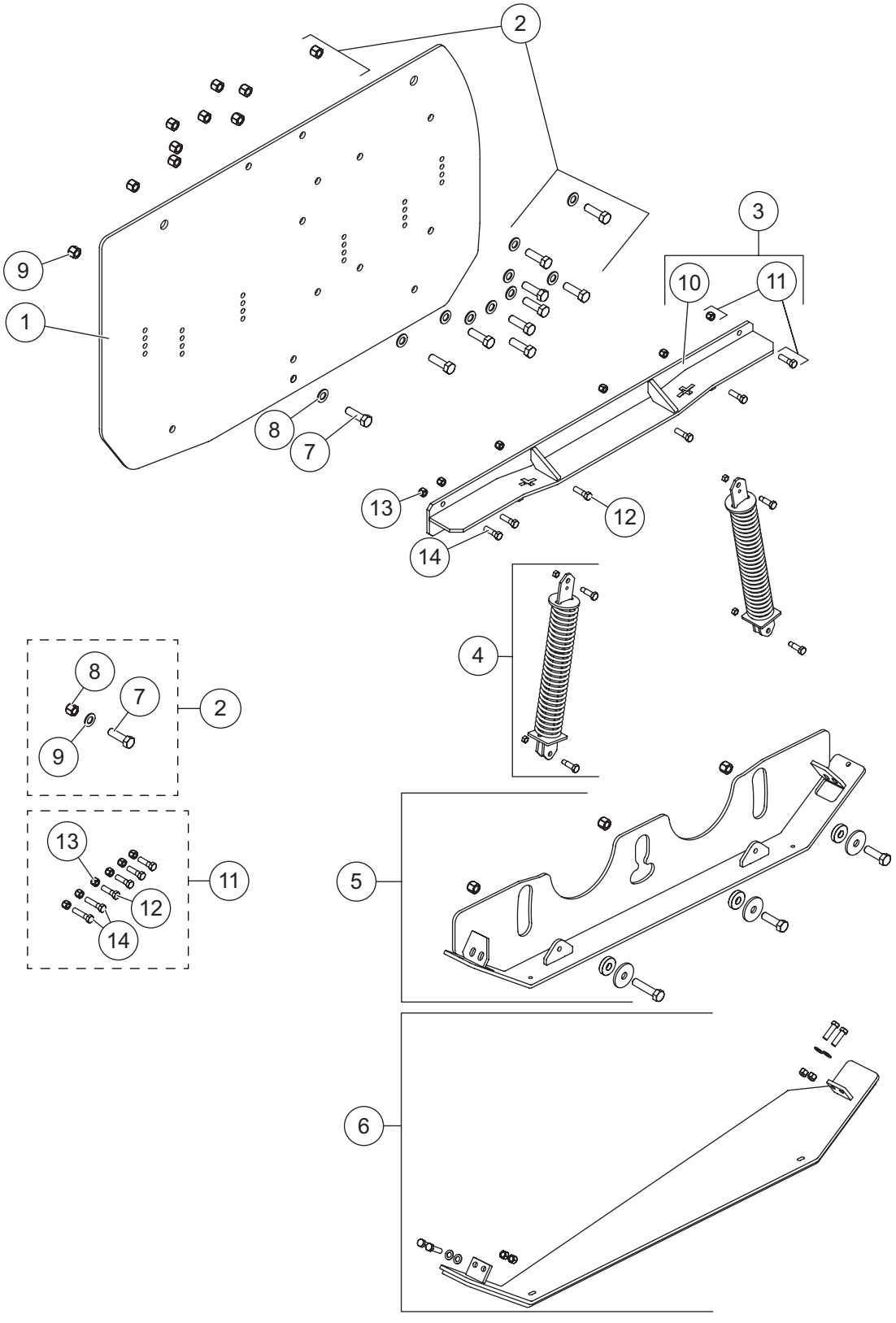

Side Plate Components				
Snowplow Model	Side Plate Kit Part	Description	Side Plate Part	Label Part
32826/-1/-2/-3	81590	Side Plate Kit, 30" – PS	81783	31056
31608/-1/-2, 32610/-1/-2	81504	Side Plate Kit, 36" – DS	81786	31057
	81593	Side Plate Kit, 36" – PS	81786	31057
32192/-1/-2/-3, 32194/-1/-2/-3, 32196/-1/-2/-3, 32190/-1/-2/-3	87221	Side Plate Kit, 42" – DS	89160	31057
	87222	Side Plate Kit, 42" – PS	89160	31057

81501 / 81590 / 81504 / 81593 / 87221 / 87222 Side Plate Kits							
Item	Part	Qty	Description	Item	Part	Qty	Description
1		1	Side Plate	5		1	Pivot Shoe Kit
2	81522	1	Bolt Bag – Side Plate	6		1	Wear Shoe Kit
3	79957	1	Spring Bracket Kit	ns	31056	1	Label – Logo, SnowEx®, Small
4	79962	2	Spring Kit with Bolts	ns	31057	1	Label – Logo, SnowEx, Medium
Item 2			**81522 Bolt Bag – Side Plate**				
7		10	3/4-10 x 2-1/2 Hex Cap Screw G5	9		10	3/4 Flat Washer, Type A Narrow
8		10	3/4-10 Hex Locknut GB				
Item 3			**79957 Spring Bracket Kit**				
10	83237	1	Side Spring Bracket	11	79958	1	Bolt Bag – Spring Bracket Kit
Item 11			**79958 Bolt Bag – Spring Bracket Kit**				
12		4	1/2-13 x 1-3/4 Hex Cap Screw G5	14		2	1/2-13 x 2 Hex Cap Screw G5
13		6	1/2-13 Hex Locknut GB				
ns = not shown				G = Grade			

Pivot Shoe Components

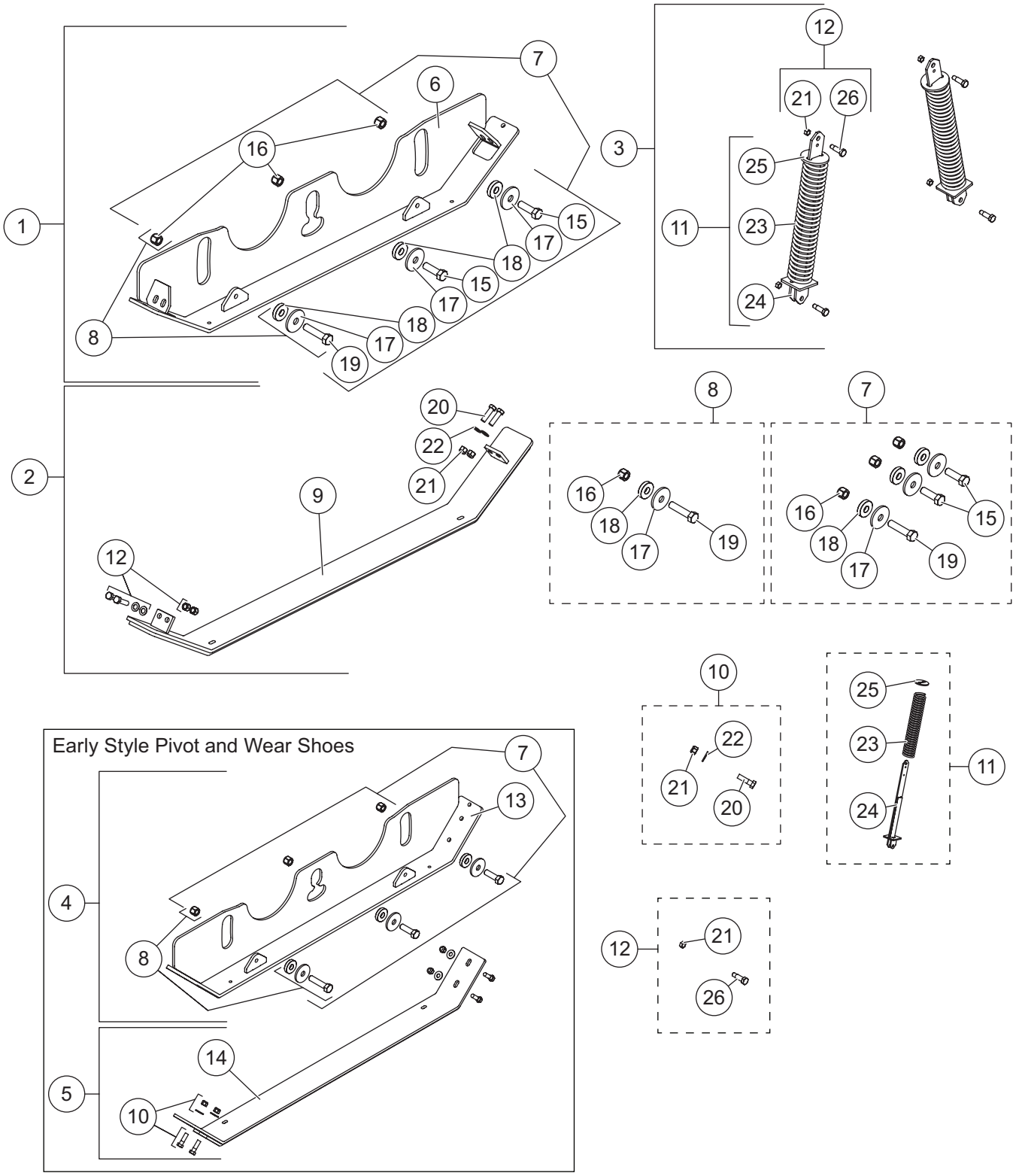

POWER PUSHER™ PIVOT SHOES

Pivot Shoe Kits							
Item	**Part**	**Qty**	**Description**	**Item**	**Part**	**Qty**	**Description**
1	87987	1	Pivot Shoe Kit (current style)	4	79968	1	Pivot Shoe Kit (early style)
2	87988	1	Wear Shoe Kit (current style)	5	79823	1	Wear Shoe Kit (early style)
3	79962	2	Spring Kit with Bolts				
Item 1			**87987 Pivot Shoe Kit (current style)**				
6	86021	1	Pivot Shoe (current style)	8	87383	1	Bolt Bag – Pivot Shoe Kit, Front
7	79971	1	Bolt Bag – Pivot Shoe Kit				
Item 2			**87988 Wear Shoe Kit (current style)**				
9	86024	1	Wear Shoe (current style)	10	79824	1	Bolt Bag – Wear Shoe Kit
Item 3			**79962 Spring Kit with Bolts**				
11	81700	1	Spring Assembly Kit	12	79963	2	Bolt Bag – Spring Kit
Item 4			**79968 Pivot Shoe Kit (early style)**				
7	79971	1	Bolt Bag – Pivot Shoe Kit	13	89442	1	Pivot Shoe (early style)
8	87383	1	Bolt Bag – Pivot Shoe Kit, Front				
Item 5			**79823 Wear Shoe Kit (early style)**				
10	79824	1	Bolt Bag – Wear Shoe Kit	14	86974	1	Wear Shoe (early style)
Item 7			**79971 Bolt Bag – Pivot Shoe Kit**				
15		2	3/4-10 x 2-1/2 Hex Cap Screw G5	18	89446	3	Bushing, Spacer 2 x 0.78125 x 0.44
16		3	3/4-10 Hex Locknut GB	19		1	3/4-10 x 3 Hex Cap Screw G5
17	86999	3	Stopper Plate				
Item 8			**87383 Bolt Bag – Pivot Shoe Kit, Front**				
16		1	3/4-10 Hex Locknut GB	18	89446	1	Bushing, Spacer 2 x 0.78125 x 0.44
17	86999	1	Stopper Plate	19		1	3/4-10 x 3 Hex Cap Screw G5
Item 10			**79824 Bolt Bag – Wear Shoe Kit**				
20		4	1/2-13 x 1-3/4 Hex Cap Screw G5	22		4	1/2 Flat Washer, Type B Regular
21		4	1/2-13 Hex Locknut GB				
Item 11			**81700 Spring Assembly Kit**				
23	50572	1	Trip Spring – 42.5 lb/in	25	20191	1	Disc, Spring – Uncoated
24	81751	1	Spring Bar – Black				
Item 12			**79963 Bolt Bag – Spring Kit**				
21		1	1/2-13 Hex Locknut GB	26		1	1/2-13 x 1-3/4 Hex Cap Screw G5
Side Plate Accessory							
ns*	89940	1	Low Wear Shoe Kit				
			ns = not shown				G = Grade

* Accessory only.

TRACE Trip Edge Components

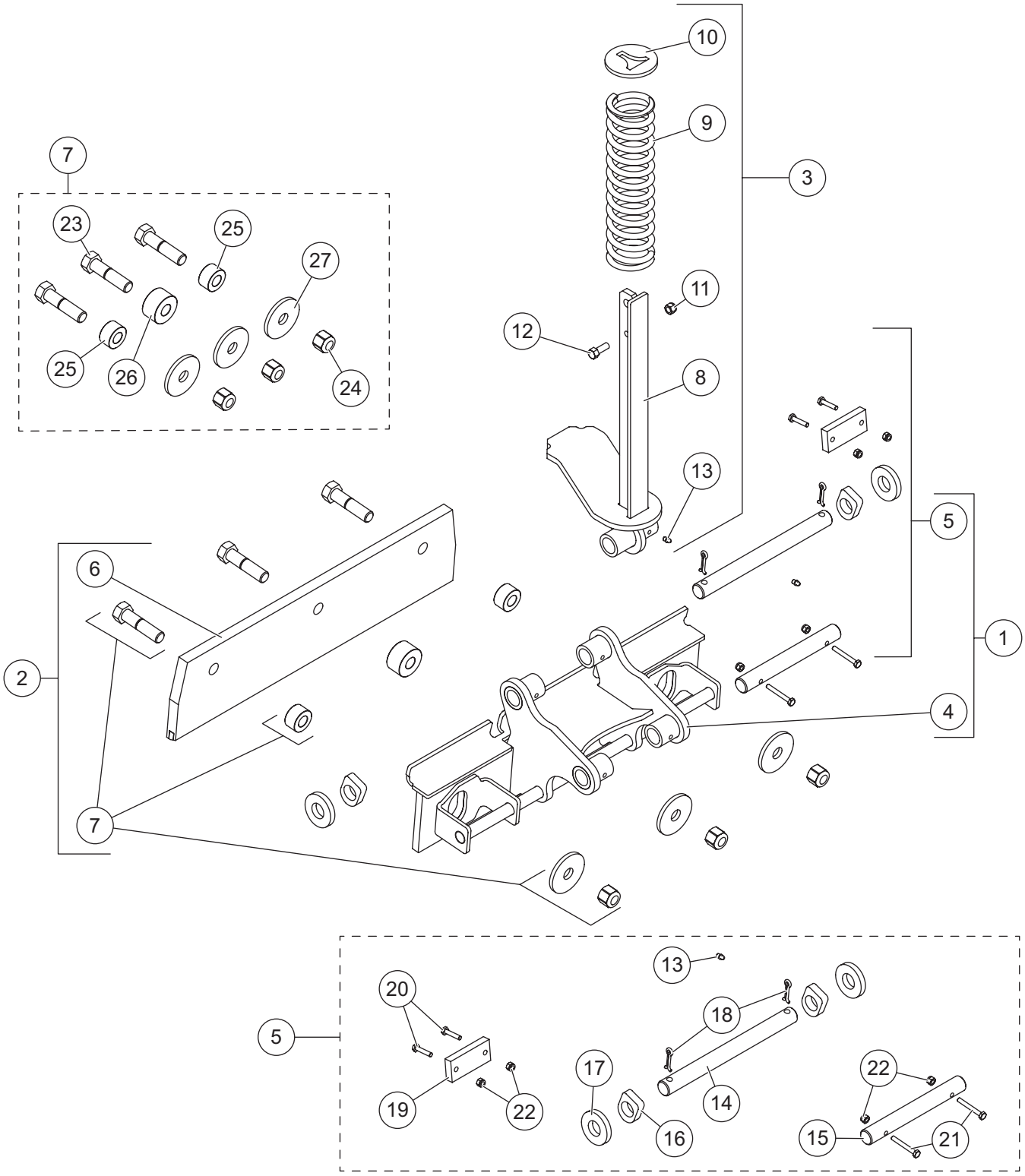

Length	Height	Pusher Plow Model	TRACE Trip Edge Qty
8'	30"	31612 / -1 / -2 / -3	4
8'	36"	31608 / -1 / -2	4
10'	30"	31614 / -1 / -2 / -3	5
10'	36"	31610 / -1 / -2	5
10'	42"	32190 / -1 / -2 / -3	5
12'	30"	32821 / -1 / -2 / -3	6
12'	42"	32192 / -1 / -2 / -3	6
14'	30"	32824 / -1 / -2 / -3	7
14'	42"	32194 / -1 / -2 / -3	7
16'	30"	32826 / -1 / -2 / -3	8
16'	42"	32196 / -1 / -2 / -3	8

TRACE Trip Edge Components

Item	Part	Qty	Description	Item	Part	Qty	Description
1	79964*	1	Trip Edge Kit	3	79986‡	1	Spring Bar Kit
2	79966†	1	Cutting Edge Kit				
Item 1			**79964* Trip Edge Kit**				
4	89984	1	Base Angle	5	79965	1	Bolt Bag – Trip Edge
Item 2			**79966† Cutting Edge Kit**				
6	87999	1	Cutting Edge with Inserts	7	79967	1	Bolt Bag – Cutting Edge
Item 3			**79986‡ Spring Bar Kit**				
8	89993	1	Spring Bar	11		1	3/8-16 Hex Locknut GB
9	89559	1	Trip Spring – 172 lb/in	12		1	3/8-16 x 1 Hex Cap Screw G5
10	89992	1	Spring Plate	13		1	Grease Fitting
Item 5			**79965 Bolt Bag – Trip Edge**				
13		1	Grease Fitting	18		2	1/4 x 1-1/2 Cotter Pin
14	86989	1	1 x 11-1/8 Rod, Lower	19	89900	1	Spring Cartridge Guide
15	89986	1	Pivot Pin, Lower	20		2	1/4-20 x 1-1/4 Hex Cap Screw G5
16	89985	2	Bearing Block	21		2	1/4-20 x 2 Hex Cap Screw G8
17	86991	2	Flat Washer Special	22		4	1/4-20 Hex Locknut GB
Item 7			**79967 Bolt Bag – Cutting Edge**				
23		3	3/4-10 x 3 Hex Cap Screw G5	26	86998	1	Bushing, Edge – Large
24		3	3/4-10 Hex Locknut GB, All Metal	27	86999	3	Stopper Plate
25	86997	2	Bushing, Edge – Small				
G = Grade							

* Single trip edge per kit.
† Single cutting edge per kit.
‡ Single spring bar per kit.

TrynEx International, LLC
531 Ajax Drive
Madison Heights, MI 48071-2429
www.snowexproducts.com

A DIVISION OF DOUGLAS DYNAMICS, LLC

Copyright © 2026 Douglas Dynamics, LLC. All rights reserved. This material may not be used, reproduced, or copied in any manner, in whole or in part, in any printed, mechanical, electronic, film, or other distribution and storage media, nor analyzed or manipulated in any manner for the purpose of training artificial intelligence technologies or systems, without the written consent of TrynEx International, LLC. In accordance with Article 4(3) of the Digital Single Market Directive 2019/790, TrynEx International expressly reserves this work from the text and data mining exception. Authorization to photocopy items for internal or personal use by TrynEx International outlets or equipment owner is granted.

TrynEx International reserves the right under its product improvement policy to change construction or design details and furnish equipment when so altered without reference to illustrations or specifications used. TrynEx International or the vehicle manufacturer may require or recommend optional equipment for snow removal. Do not exceed vehicle ratings with a snowplow. TrynEx International offers a limited warranty for all equipment and accessories. See separately printed page for this important information. The following are registered (®) or unregistered (™) trademarks of Douglas Dynamics, LLC: POWER PUSHER™, SnowEx®, TRACE™.

Printed in U.S.A.